Analog Audio Processor for three-way speakers with Doppler compensation

Analog Audio Processor AC-AAD

- 12 VAC Supply Voltage
- On-board Muting/Standby-Sequencer with Audio Signal Detection (ASD) and MUTE and STBY Control inputs and Outputs
- Extremely Low Distortion and Noise
- Symmetrical and Single Ended Audio Input
- Adjustable Audio Input Sensitivity
- Double Baffle Step compensation
- Adjustable Brilliance Enhancement
- **Doppler Compensation** (**World-First**) for the Woofer and Optional for the Mid-Range Channel
- Minimum Phase / Minimum Delay Filters fulfilling the most recent IRT recommendations on group delay
- Selectable crossover frequencies
- RoHS compliant, IPC-A-600 Class 2 and IPC-A-610 Class 2

Figure 1: Analog Audio Processor AC-AAD for three-way speaker system

Description / Novel Features

The purpose of the compact, high-end, audio processor AC-AAD is to generate the appropriate driving signals for a Doppler compensated three-way speaker system with a tweeter, one or two mid range speakers and one or several woofers. The AC-AAD shows an excellent linearity and extremely low distortion, combined with a perfect flat audio frequency response, and low noise.
The block diagram in
Figure 2 visualizes the main processing blocks.

The AC-AAD receives the audio input as single ended or symmetric signal between 200mV and 2V amplitude. A differential to single ended amplifier with high common mode rejection ratio delivers the audio signal to a variable gain stage, which allows adjusting the audio level within the processor to 2V amplitude. A band pass filter in the input circuitry determines the noise bandwidth between 3Hz and 240kHz and rejects out of band spurious signals. Sophisticated double baffle step compensation is on-board and can be easily customer tailored to the chosen enclosure.
The following crossover uses a 3rd order minimum phase and minimum delay filter. Its crossover frequencies can be customer selected with a default value of 100 Hz and 1kHz. This dedicated filter avoids that harmonic frequencies of a music instrument are audible delayed with respect to their basic tone.
The high pass channel comprises an adjustable brilliance boost function, i.e. 0 dB to +3dB boost of frequencies above 7 kHz, which some audience may prefer.
In order to compensate the depth difference of the acoustical phase centers between tweeter and mid range speaker(s), an adjustable delay (first order all pass section) is included in the high-pass channel. The depth difference compensation can be customer selected depending on the used tweeter and mid range speaker(s).
The mid range channel optionally and the woofer channel as standard comprise Doppler Processors for the connected speakers.

Analog Audio Processor for three-way speakers with Doppler compensation

The woofer channel comprises a 2nd order minimum phase and minimum delay high pass filter with a user selectable corner frequency of 16Hz. This filter eliminates rumble from turntables or sub-sonic frequency content from digital recordings.
This high pass filter solely determines the lower corner frequency of the three-way box if MFB (Motion Feed Back) amplifiers as the AC-PAR75 are used for the woofer(s).
In the mid range and in the woofer channel as **world first novelty** the physically unavoidable Doppler-Effect is eliminated, which is produced by any moving speaker membrane. For that purpose an analog circuit continuously computes the Doppler generated phase modulation. This signal is used to control a phase modulator in such way, that the Doppler effect of the speaker membrane is exactly compensated. Such the acoustical phase center of the speaker is held at a fix location. Virtually a non-moving speaker membrane is created. This avoids completely the audible roughness of higher frequency tones through the Bessel lines that the Doppler-Effect would generate. As well the Doppler induced second harmonic frequency components (a.k.a. Eigen-Doppler) of the moving membrane are removed.
The internal outputs carries also MUTE and STBY signals for the AC-PAZ75 or AC-PAR75 amplifiers or other power amplifiers with similar interfaces.
The implemented digital controller is responsible for ensuring the proper ON/OFF sequence as well as a continuous monitoring of the module temperature. A further task of the on-board controller is the Audio Signal Detection (ASD) in order to handle MUTE/STBY and ON/OFF dependent of the presence of the audio signal. That function can be disabled (see description on page 5 for more details). Optionally the on-board controller handles the drivers for a two-color LED and/or a display via I2C.

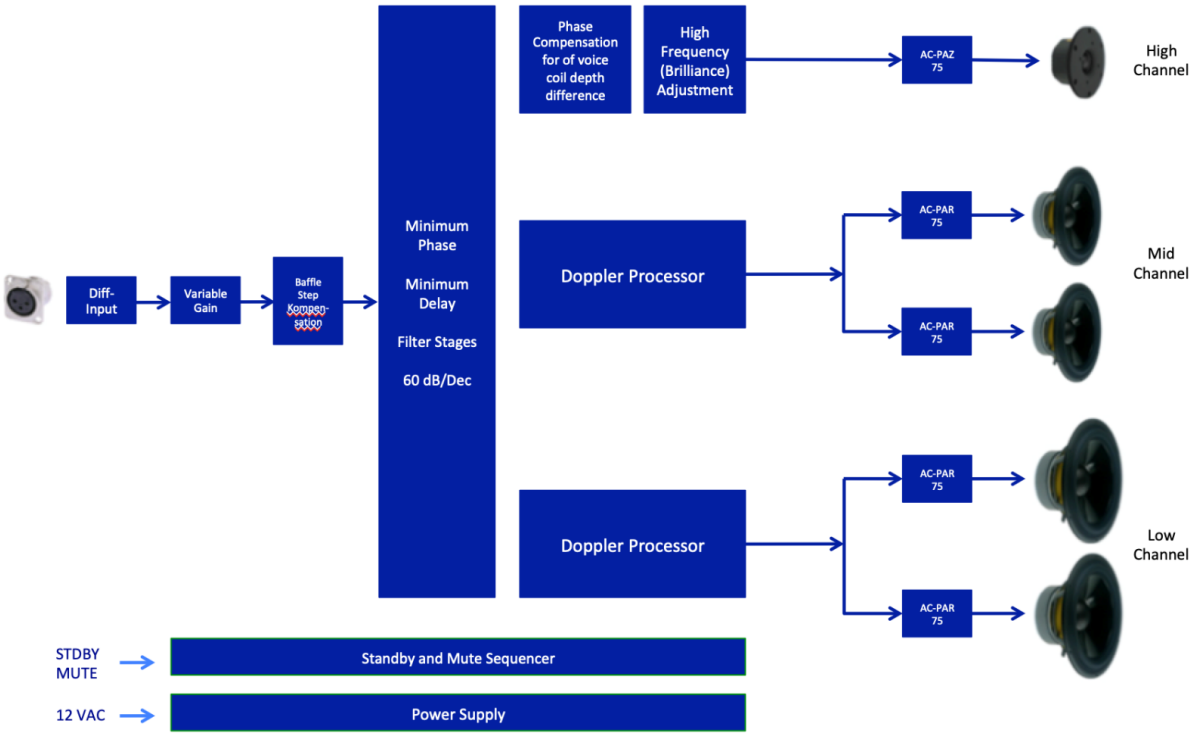

Figure 2: Functional Block Diagram of the Analog Audio Processor AC-AAD in maximum configuration with Doppler Compensation for themid-range as well as for woofer channel

Analog Audio Processor for three-way speakers with Doppler compensation

Figure 3 shows the frequency response of the 3rd order cross over with default center frequencies of 100 Hz and 1 kHz. The outputs of the crossover add for all frequencies exactly to unity.
Also visible is the 2nd order high pass filter at 16 Hz for the woofer channel. All corner frequencies can be customer selected.

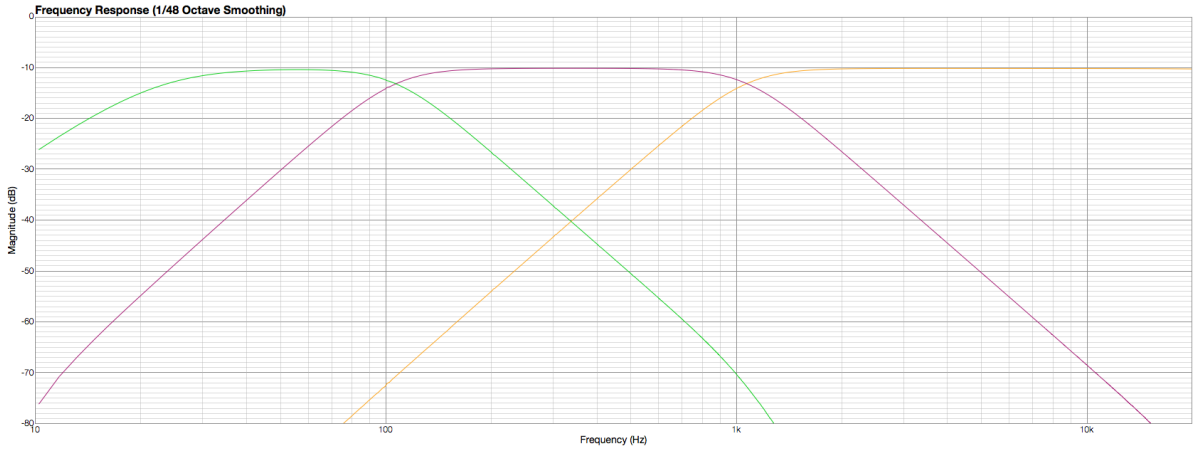

Figure 3: Frequency response of the crossover

Figure 4 shows the frequency response of the tweeter channel with the variation range of the high frequency boost between 0 dB and +3 dB. Some audience prefers that high frequency boost as it brings brilliance into the sound.

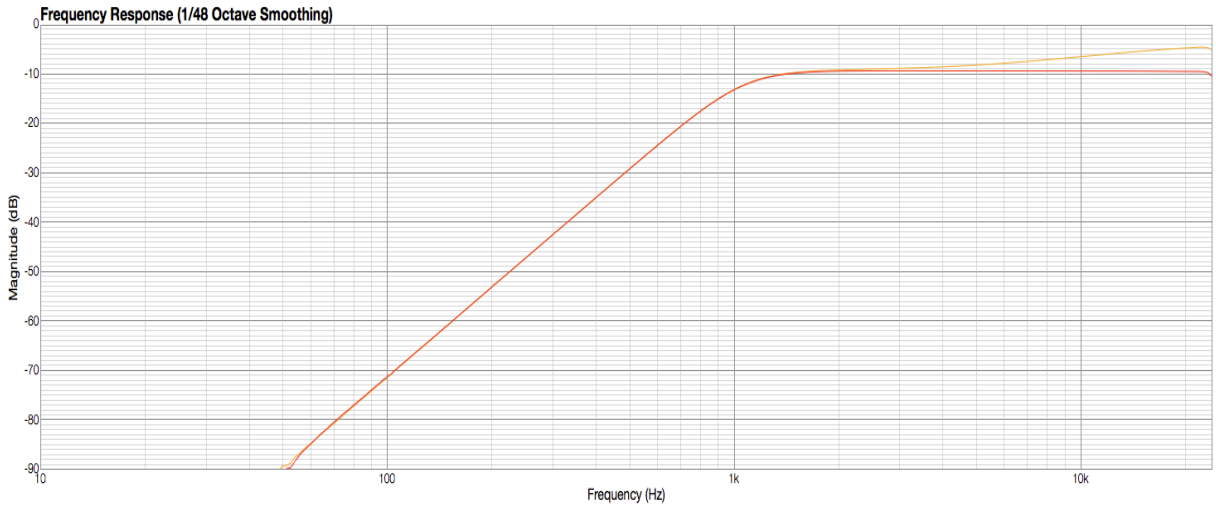

Figure 4: Selectable Range of the Frequency response of the tweeter channel

Figure 5 shows the frequency response of the woofer channel including the effect of the 16 Hz high pass filter of 2nd degree which removes rumble from turn tables and sub sonic frequencies from digital recordings. The corner frequency of this filter is customer selectable and has a default value of 16 Hz. In case AC-PAR75 Motional Feed-Back amplifiers are used for the woofers, that filter determines the lower roll-off frequency of the entire box.

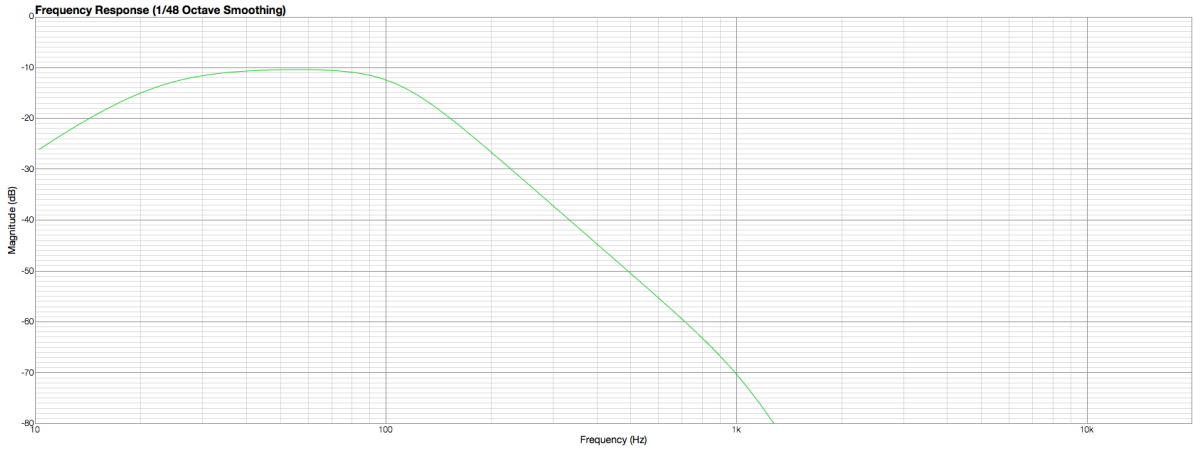

Figure 5: Frequency response of the woofer channel with 2nd order high pass filter at 16 Hz

Fehler! Verweisquelle konnte nicht gefunden werden. shows the frequency response of the analog computed signal representing the membrane phase due to its movement towards and back from the listener. This signal is used in the AC-AAD phase modulator(s) in order to exactly compensate the phase modulation (Doppler Effect) of the moving speaker membrane(s).

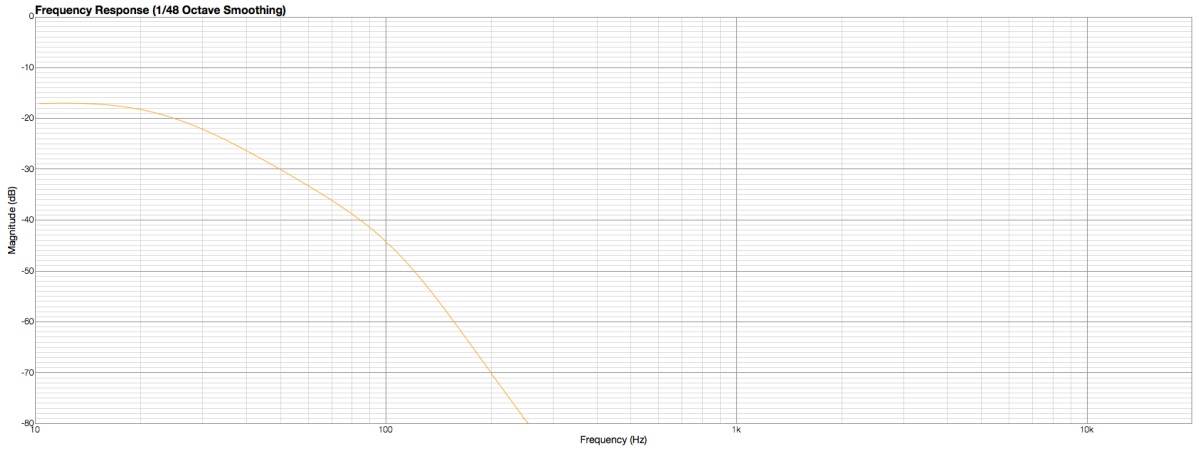

Figure 7: Frequency response of the analog computed signal representing the phase modulation of the speaker membrane

Figure 8 shows a typical application of the AC-AAD module.

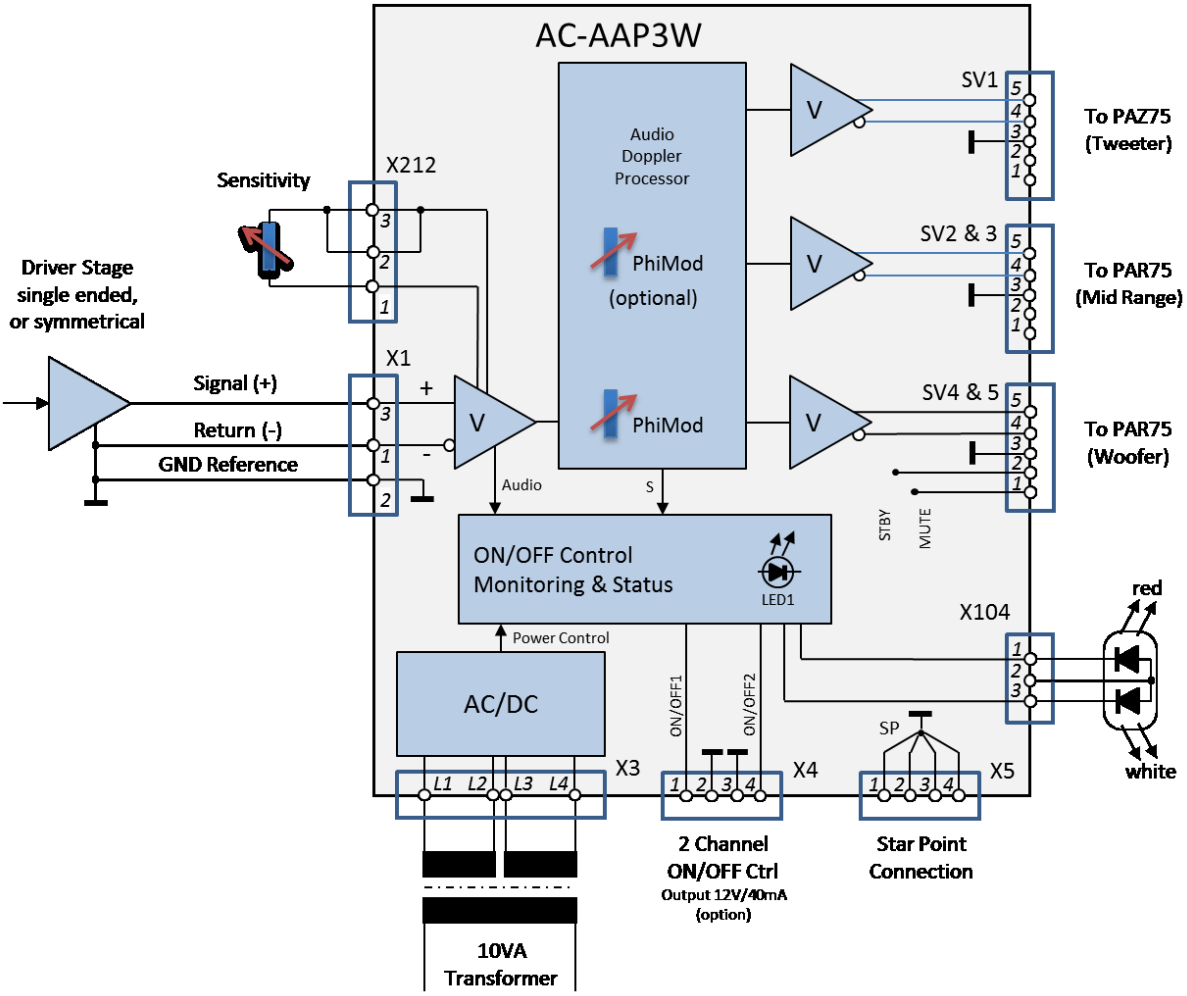

Figure 3: Typical Application for the module

Detailed description and Application Information

The AC-AAD is operated typically with two equal AC voltages of 12 VAC. Two separate windings of an AC transformer are recommended, but also a middle tapped secondary winding can be used (see Figure 3 for details).

The audio input signal is feed to a differential input amplifier stage with high common mode signal rejection in order to avoid ground (GND) loops. A connection between the driving source ground and the AC-AAD GND is therefore necessary in order to establish a common GND reference.

In order to simplify building a complete loudspeaker box with e.g. one tweeter and one or two mid range speakers and one or several woofers, a dedicated star-grounding scheme is implemented for an optimum result. The AC-AAD board offers a star ground, which is realized by the dedicated 4-port connector X5. All GND reference lines from the power amplifiers (AC-PAR75 and AC-PAZ75 have differential inputs and a separate GND reference connection) should be connected there. Also the pin 1 of the XLR connectors should be connected there. This guarantees a single star ground without any ground loops.

Analog Audio Processor for three-way speakers with Doppler compensation

The AC-AAD is optimized for the combination with the amplifier modules AC-PAZ 75 for the tweeter, one or two AC-PAR 75 for the mid range speakers and one, or several AC-PAR 75 as drivers for the woofer(s).

On-Board controller

An on-board microprocessor serves inter alia as sequencer for the handling of the STBY and MUTE function as well as for the signaling of operation mode and status. The AC-AAD features an auto on function through the detection of the input signal and an auto off function after 10 Minutes without input signal. This function is dubbed Audio Signal Detection (ASD).

As default the ASD function is enabled and may be disabled with an installed jumper X101.

In case the MUTE-Signal is pulled down by external equipment during power-on of the AC-AAZ02 the system will start in OFF-Mode until release of the MUTE-Signal.

In case the MUTE-signal is open and not activated during power-on the system will be activated and further equipment will be switched on in a defined sequence.

With active ASD the system will stay in ON as long as an audio signal above the implemented threshold will be detected. In case the signal is long enough under the threshold (adjustable by firmware) the controller changes the status to STBY after 8 minutes and after additional two minutes the system switches to OFF.

Furthermore the system could be controlled by the MUTE-Signal independent from the audio input signal. In case the MUTE signal is pulled down for more than 10 minutes, the controller will switch the system to OFF.

All implemented durations and thresholds for ON and OFF could be changed easily in the (values in the EEPROM of the on-board controller).

Mute (MUTE), standby (STBY) and OFF will be indicated by different signals of the connected LED (see table on page 14).

Support for optional Displays

An I^2C on-board interface allows connecting a various display types showing the operating mode, the temperature, the audio level and a customer defined logo. See the following example for a possible implementation and display content of such a display.

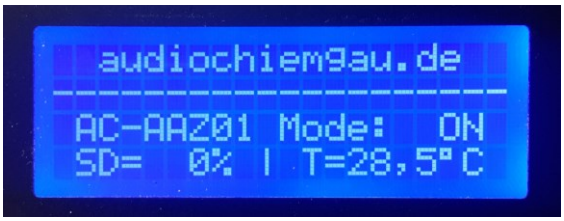

This example shows the simplest solution with a four line alphanumeric display.

Supported are also graphical displays with monochrome as well as color displays including touch function to control the different modes of the Audio Processor. All are available with different resolutions and different sizes.

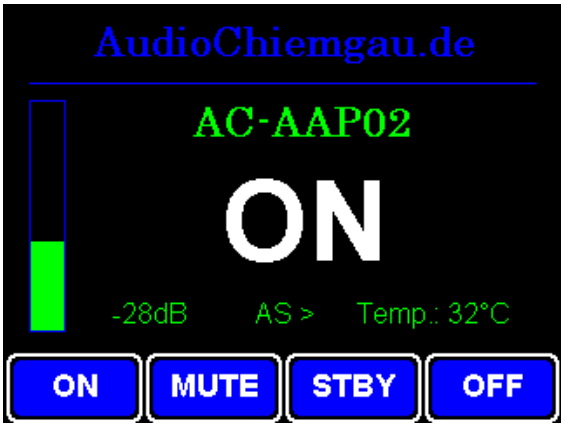

3.2" Color Display with four touch buttons

Please contact AudioChiemgau for available display types, display colors or content changes.

Temperature Monitoring

An over temperature monitoring of the module is implemented. In that case the module as well as external connected equipment will be switched OFF via the remote control lines (see below). After cooling down, the system will be reactivated. Over temp condition will be indicated by the status (LED2) or the display if connected.

Remote ON/OFF control outputs

Up to two remote control lines (ON/OFF) for external equipment are also available. The outputs are under control of the on-board processor, are short circuit protected and designed to drive 12V relays directly with up to 40mA load current.

In OFF-mode the internal supply voltage for the module itself is switched off in order to reduce power consumption in this mode.

The background illumination of an optionally connected display will also switched off 15 seconds after the system switches to OFF.

Analog Audio Processor for three-way speakers with Doppler compensation

Display Details (example)

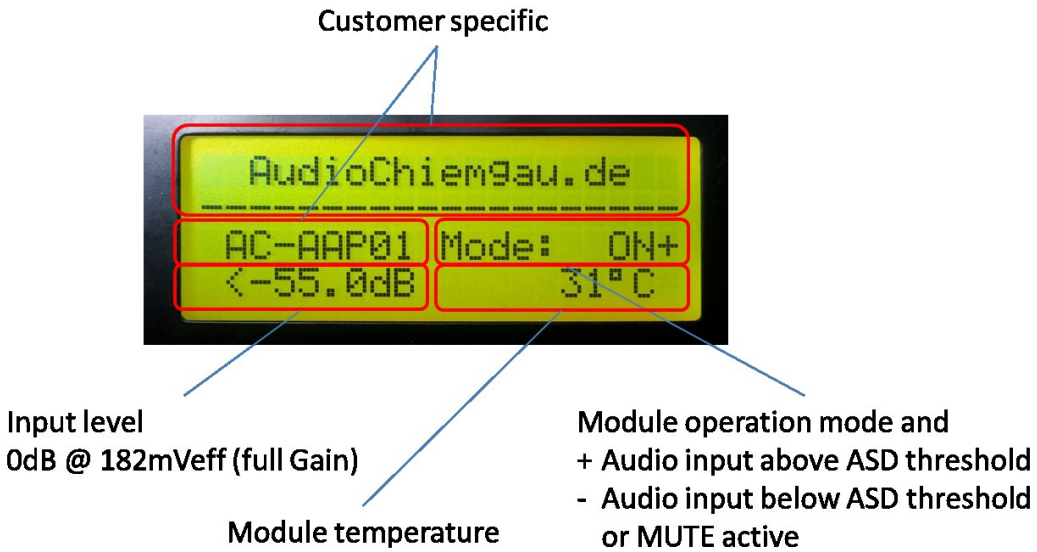

<u>Customer / User Adjustments:</u>

1. Sensitivity (gain) of the input differential amplifier, either with the built-in potentiometer or with an optional user accessible external potentiometer
2. Customer defined brilliance boost
3. Customer defined acoustic phase center compensation between tweeter and woofer(s)
   Usually not end user adjustable
4. Customer defined cross over frequencies (default 100 Hz and 1000 Hz)
   Usually not end user adjustable
5. Customer defined high pass filter for the woofer channel (default 16 Hz)
   Usually not end user adjustable

Analog Audio Processor for three-way speakers with Doppler compensation

Absolute Maximum Ratings (T_{amb} = 25°C; unless otherwise specified)

Symbol	Parameter	Value	Unit
Vs	AC supply voltage (two symmetrical transformer windings)	20	Vrms
T_{op}	Operating ambient temperature range	0 to +50	°C
V_{OD}	Open drain voltage in high state (MUTE/STBY)	35	V
T_{stg}, T_j	Storage temperature	+ 80	°C

Stresses beyond those listed under "Absolute Maximum Ratings" may cause permanent damage to the module.

Electrical Characteristic (T_{amb} = 25°C; f = 1kHz; unless otherwise specified)

Symbol	Parameter	Min	Typ	Max	Unit
Vs	AC supply voltage range Two identical transformer windings, or mid tapped secondary winding	10	12	18	Vrms
Is_{OFF}	Supply current in OFF		10	20	mA
$Is_{operating}$	Supply current in nominal operation [1])	90	110	130	mA
P_S	Required AC power per winding			5,0	VA
Audio Input Left or Right Channel					
R_{id}	Differential input resistance (AC)		100		kΩ
R_{i0}	Input resistance to GND (AC)		50		kΩ
V_{CM}	Input common mode range		±5		V
V_{IS}	Input sensitivity for 2V differential output Voltage, adjustable via internal10 turn potentiometer or external potentiometer	0,2		2	V
V_{ASD}	ASD Sensitivity/Threshold of V_{IS} (adjustable by firmware)		0,5 (TBC)		mV
Standby & MUTE Function (open Drain driver with pull-up)					
I_{OL}	Low-level sink current capability			20	mA
V_{OH}	Output voltage in high-state [2])	4,3	4,7	13	V
External Error and Status Indicator					
I_{LED1}	LED operating current [3])		1,5		mA
I_{LED2}	LED operating current [4])		1,5		mA
Remote Control Output Driver					
I_{NOM}	Nominal driver capability		40 [5])		mA
V_{out}	Output Voltage Driver active With typical supply voltage Vs	-16	-14	-12	V
I_{max}	Max output current before switch off		-65		mA

[1]) Without external loads on the remote control driver(s) and without display
[2]) See interface description for more details
[3]) Adjustable by R101 and R106
[4]) Adjustable by R101 and R106
[5]) Also deliverable with higher drive capability

Symbol	Parameter	Min	Typ	Max	Unit
I_0	Short circuit output current (fold back)	-10			mA
V_{OFF}	Output Voltage Driver OFF	-0,5	-0,2	+0,5	V
Over Temperature Detection and Turn ON/OFF					
T_{OFF}	Switch OFF temperature	+65	+70	+75	°C
T_{ONHY}	Switch ON Hysteresis		4		K

PCB Layout and Mechanical Support

The complete circuit is realized on a multi-layer PCB with the dimensions of 150mm x 80mm. The PCB provides five mounting holes as shown in the figure below.

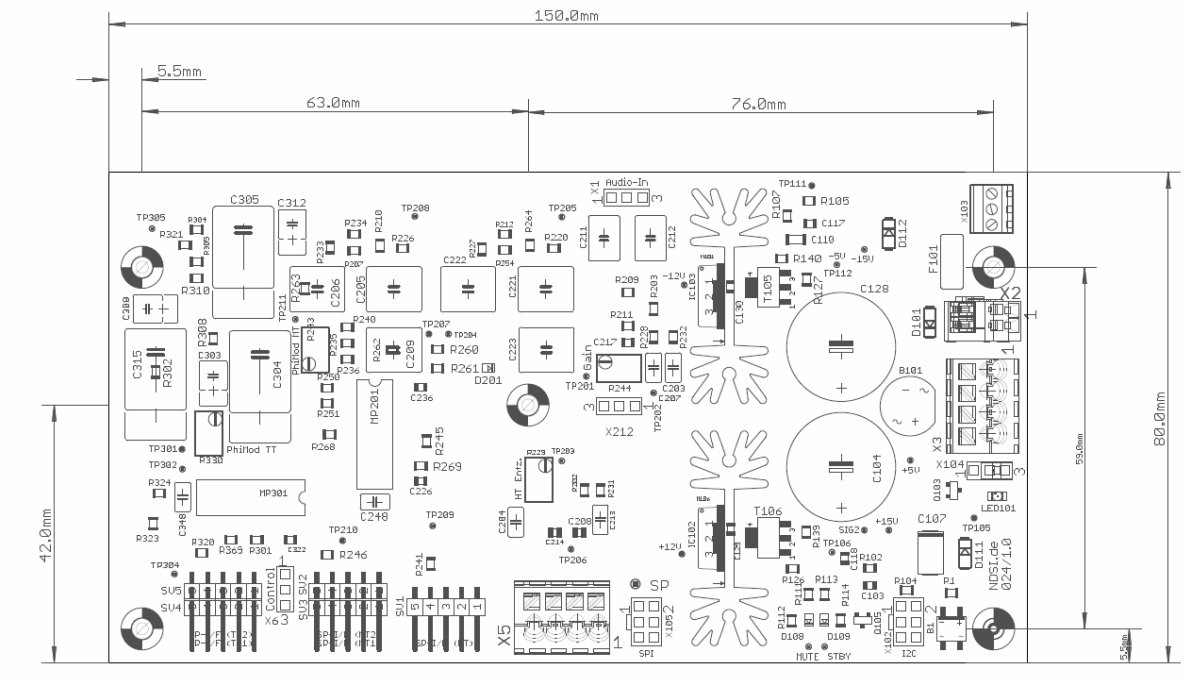

Figure 4: Layout of the PCB, top view and populated as AC-AAD

Figure 5 shows an optional flange for vertical mounting of the module.

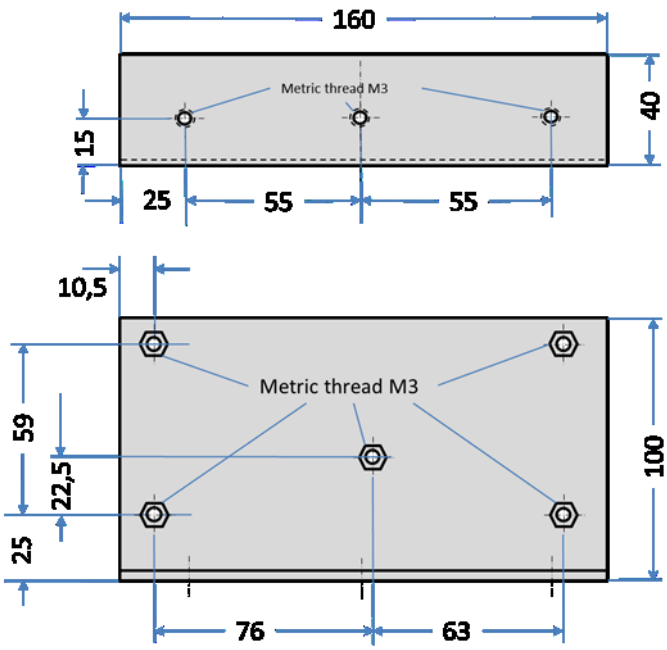

Figure 5: Optional Flange for vertical mounting of the module

The mounting flange provides on the small side (upper sketch) three metrical threads M3.

Both sides have flat surfaces; there are no protruding elements.

The flange is not necessary for any cooling purpose.

Note: Slightly changed dimensions compared to 1st generation of the AAP.

Mechanical Characteristic (AC-AAD PCB without mounting flange)

Symbol	Parameter	Min	Typ	Max	Unit
X	Module Dimension X	149	150	151	mm
Y	Module Dimension Y	79	80	81	mm
H	Module Height H		45		mm
W	Module Weight (TBC)		105		g

Additional cooling of the module is not required

Electrical Interfaces

Connector Types, Jumpers and Interface Description

Connector	Parameter/Signal	Typ	Wire Size
X1	Audio input interface for left respectively right channel	Pin Header 1x3 RM 2,54mm	-
X3	AC Power Supply	WAGO 250-204	0,2 – 1,5mm² AWG 24-16
X4	Remote control output	WAGO 233-504	0,08 – 0,5mm² AWG 28-20
X5	GND connection (Star Point)	WAGO 250-204	0,2 – 1,5mm² AWG 24-16
X6	Connector for external control (MUTE/STBY)	Pin Header 1x3 RM 2,54mm	-
X101	Enable/Disable ASD-Function Installed: ASD disabled	Pin Header 1x3 RM 2,54mm	-
X102	I^2C-Interface (reserved)	Pin Header 2x3 RM 2,54mm	-
X104	Connector for external two color LED (option)	Pin Header 1x3 RM 2,54mm	-
X105	SPI-Interface (reserved)	Pin Header 2x3 RM 2,54mm	-
X212	Interface for external gain potentiometer	Pin Header 1x3 RM 2,54mm	-
SV1	Audio out tweeter, with MUTE and Standby to Power Amplifier	Pin Header 1x5 RM 2,54mm	-
SV2 SV3	Audio out mid-range, with MUTE and Standby to Power Amplifier	Pin Header 1x5 RM 2,54mm	-
SV4 SV5 [6])	Audio out woofer, with MUTE and Standby to Power Amplifier	Pin Header 1x5 RM 2,54mm	-

Interface: AC Power Supply and Connector Pinout (X3)

X3 Pin	Parameter/Signal	Remark
L1	AC Input A (or positive DC supply)	L2 and L3 could be connected to use transformer with center tap For proper power drop detection take care of polarity in case of DC supply.
L2	Return A internally connected to L3	
L3	Return B internally connected to L2	
L4	AC Input B (or negative DC supply)	

[6]) SV4 and SV5 optional and only required for more than two woofer interfaces

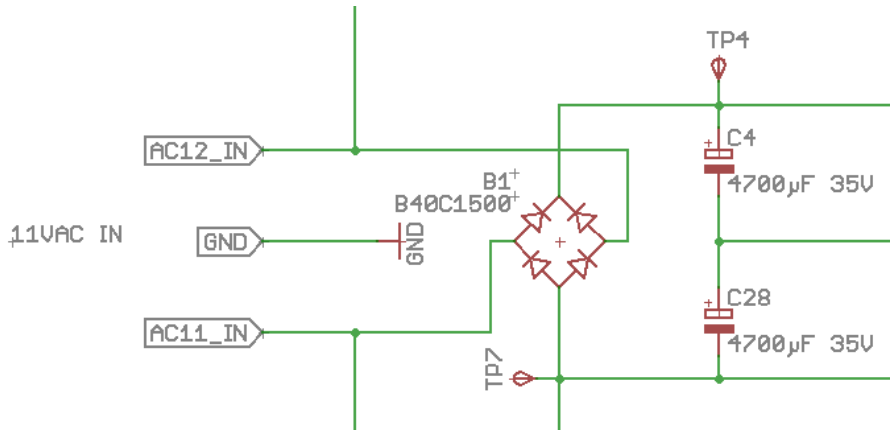

Figure 6: AC Input Circuit Diagram

Interface: Optional Status Indicator LED Connector Pinout (X104)

The module offers a status indication output for an external LED (e.g. white LED) and a second LED interface for fault condition indication (e.g. red LED). If not used, short the connector of the white in order to activate the on-board LED, or let the connector open if no indication is required. Both LEDs could be realized with a two-color LED with common anode (e.g. OptoSupply, Part Number OSRMMA7K91B).

X104 Pin	Parameter/Signal	Remark
X104-1	Cathode of indicator LED2 (red)	If no second (red) LED is implemented the LED1 will flash in case of failure condition
X104-2	Common contact (anode) for both LEDs	Open: on-board indicator disabled Closed: on-board indicator active LED: Connect to additional LED for external indication
X104-3	Cathode of indicator LED1 (white)	

The AC-AAD (V1) provides a status indication by the internal LED1 and an optional external LED supported by a second LED2 which could be connected to the module. Both will be used for signaling of the different states of the audio processor and the connected equipment. In nominal operation the white LED is permanently on and they will flash for signaling of certain nominal operating states or during failure condition:

Flashing	Status	Remark
1 (white)	System in MUTE	System in nominal operation (no failure condition)
2 (white)	System in Standby	
3	-	Not implemented, reserved
4 (red)	Over Temperature (>60°C)	Over temperature detected - module switched to OFF for its own protection

OFF: The LED1 (white) will “breathe” every 10 seconds to indicate a powered system.

Analog Audio Processor for three-way speakers with Doppler compensation

Interface: Audio Out and Control Connector Pinout (SV1, SV2, SV3, AV4 and SV5)

The AC-AAD (V1) provides up to four interface connectors for connecting of independent woofer amplifiers (e.g. AC-PAR75) and one additional connector for the tweeter amplifier like the AC-PAZ75.

The four woofer interfaces are connected in parallel.

SV1-5 Pin	Parameter/Signal	Remark
1	MUTE Output	Could be used to control external power amplifiers like AC-PAZ75 and AC-PAR75 (see chapter below for more details)
2	STBY Output	
3	GND	
4	NF (Audio) Output negative	
5	NF (Audio) Output positive	

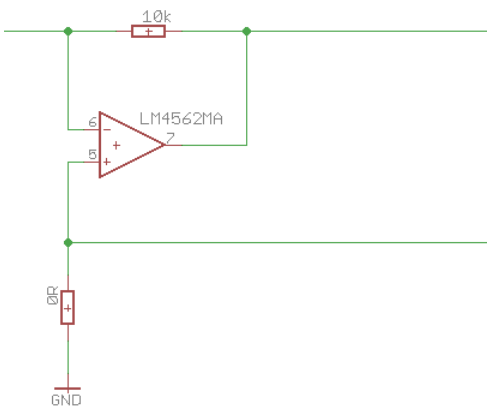

Figure 7: General Internal Audio Output Interface

Standby (STBY) and Muting (MUTE)

The module offers two independent output lines for Standby and Muting. Both outputs are realized as Open Drain outputs with implemented pull-up resistors and are active low. They can serve as outputs in order to synchronize external power amplifiers like AC-PAZ75 and/or AC-PAR75.

The circuit dedicated to the switching on and off of the amplifier has been carefully optimized to avoid any kind of uncontrolled audible transient at the output during settling of the internal control loops, especially for the amplifiers AC-PAZ75 and AC-PAR75.

If not used, both control outputs may be left open

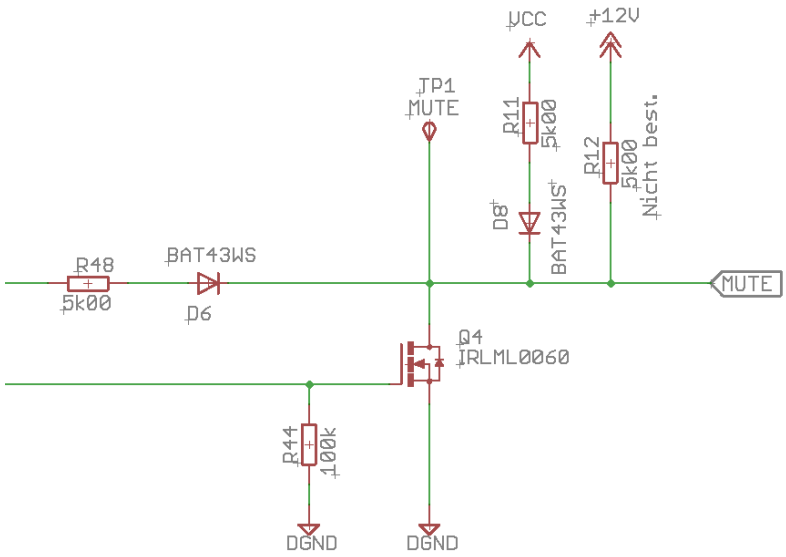

Figure 8: MUTE Output Interface (Standby identical if populated)

Normally the AC-AAD (V4) delivers 5V in high-state (R12 not populated) but external pull-up resistors can be used to handle external receivers with higher input voltages

System with MUTE-Switch or Audio Signal Detection (ASD):

Optionally the system may be controlled by an external (manual) MUTE switch, which may be connected to X6.

In case the MUTE switch is closed and the system will be powered the equipment will stay in OFF and the Audio Signal Detection (ASD) will be ignored. After turn-on sequence the system will stay in MUTE until the MUTE switch will be opened. With closed MUTE switch the system will turn automatically in STBY after 8 Minutes and change to OFF after 10 Minutes. Then the system can be activated by the MUTE switch again.

In case the MUTE switch is open during power on the equipment will turn to ON immediately and the Audio Signal Detection (ASD) will be enabled. This will initiate a sequence to turn on the whole equipment including external equipment under control of the remote control output(s) on X4. Is no audio signal detected above the threshold for 8 Minutes the system will change to STBY and after further two minutes the on-board controller of the AC-AAD will turn OFF the system. X6 provides the interface to connect external switches to handle MUTE and/or STBY.

Interface: External MUTE/STBY (X6)

X6 Pin	Parameter/Signal	Remark
1	MUTE	Connect MUTE (Pin1) and/or STBY (Pin3) to GND to activate the function Could be used to connect external switch(es)
2	GND	
3	STBY	

Analog Audio Processor for three-way speakers with Doppler compensation

Interface: Remote Control Output (X4)

X4 Pin	Parameter/Signal	Remark
1	Remote Control Out Channel 1 (N)	To be used for power switching of the transformer for power amplifier(s)
2	DGND (return)	

The module offers one high-side drivers for control (switch ON/OFF) of unit internal or external equipment. The output is under control of the on-board processor and its firmware. The output is capable to drive relays directly and is short circuit proof with fold-back characteristic.

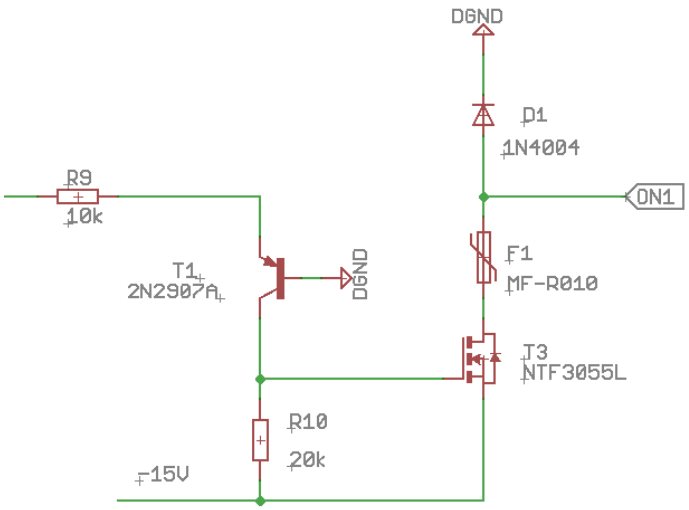

Figure 9: Relay driver stage for 2-channel ON/OFF remote control

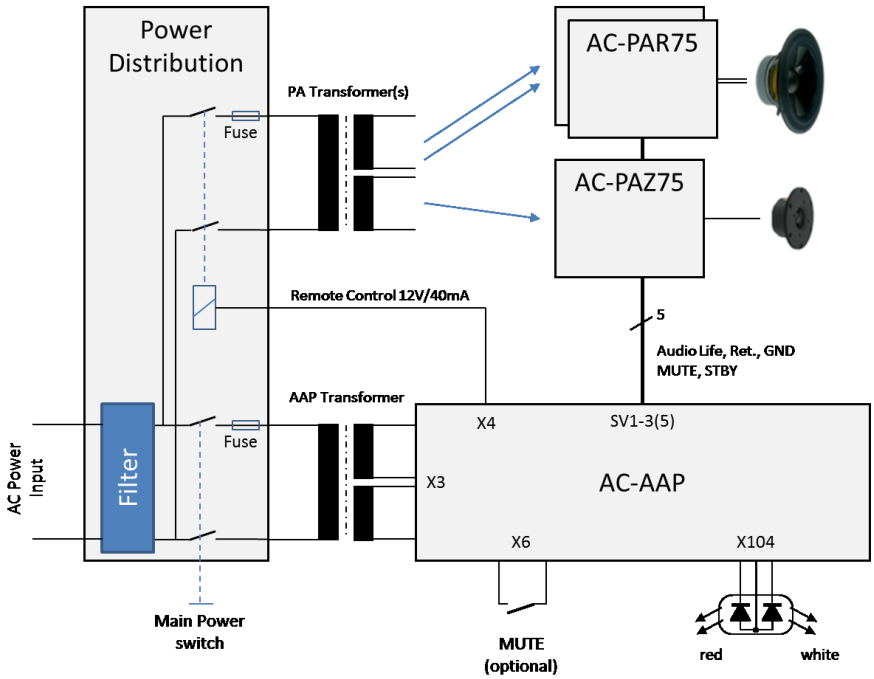

Figure 10: Recommended power distribution and control configuration

Analog Audio Processor for three-way speakers with Doppler compensation

Interface: Audio Input Connector Pinout (X1/X2)

X1/X2 Pin	Parameter/Signal	Remark
1	Ver. 1.1: Audio Input negative Ver. 1.2: Audio Input positive	
2	GND	Signal ground, could be used for shielding
3	Ver. 1.1: Audio Input positive Ver. 1.2: Audio Input negative	

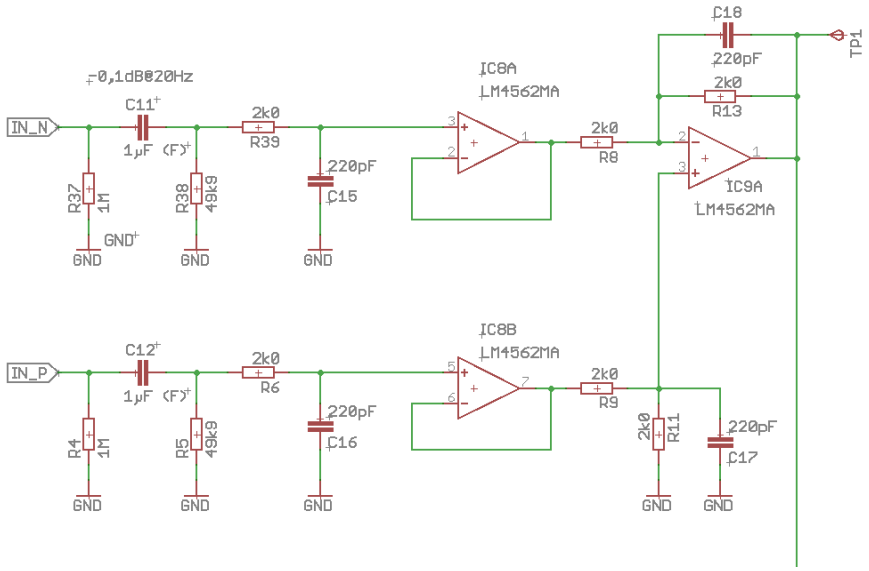

Figure 11: Audio Input Interface

The positive audio input is commonly used with Audio Signal Detection (ASD) circuit

Interface: External Gain Potentiometer (X212)

X212 Pin	Parameter/Signal	Remark
1	Potentiometer low	External Gain potentiometer 10kΩ
2	Commonly used for potentiometer center tap and max	
3		

Remark: The Internal potentiometer R244 is not populated if an external potentiometer is used

Change History

Version 1.0 to 1.1:

- Dimensions of the Module and the optional Mounting Flange

Version 1.1. to 1.2:

- Some minor changes

Version 1.2. to 1.3:

- Orientation of X1 changed (now similar to X212)
- Chapter for on-board controller complemented with different optional displays